Prod. Code 3626304

## Assembly instructions

# ‘Round’ Chalk Stand

**Thank you for choosing a Sport-Thieme product!**
Please read the following notes carefully before use so you can enjoy this product safely and keep these instructions for future reference. If you have any questions, our team is here for you.




1224301 · © 2024 Sport-Thieme GmbH

SPORT-THIEME
Sport-Thieme GmbH · D-38367 Grasleben · sport-thieme.com
Tel. +49 53 57 181 503 · Fax +49 53 57 181 921 · info@sport-thieme.com

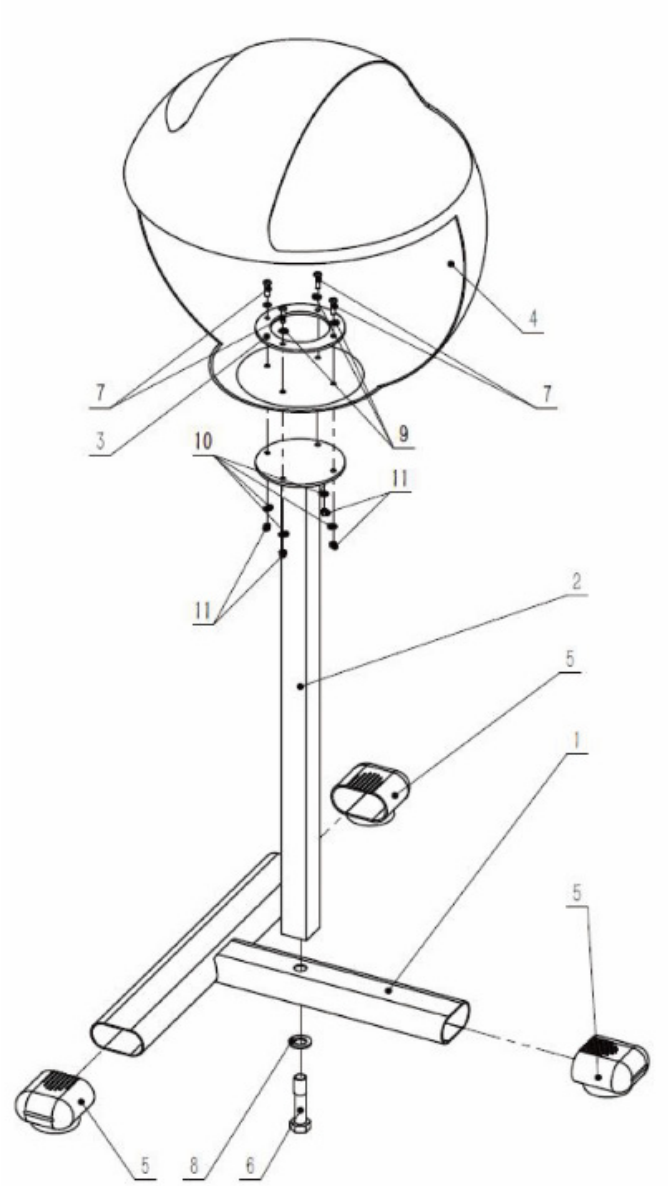


## Part List

| Number | Quantity | Part Name |
|---|---|---|
| 1 | 1 | Bottom Base |
| 2 | 1 | Upright Tube |
| 3 | 1 | Base Plate |
| 4 | 1 | Chalk Bowl |
| 5 | 3 | Flat Oval End Cap 40*80 |
| 6 | 1 | Bolt M16*70 |
| 7 | 4 | Cross Recessed Round Head Screw M5*20 |
| 8 | 1 | Flat Washer 16 |
| 9 | 4 | Flat Washer 5 |
| 10 | 4 | Spring Washer 5 |
| 11 | 4 | Nut M5 |